Work Order ID 90802

Wednesday, September 26, 2012 1:26:02 PM

90802

Item ID: D4387-041 **Accept** *N900040100* **Setup Start** *NS1*

Revision ID:

Item Name: Harness Assembly **Stop** *NS2*

Start Date: 9/26/2012 **Start Qty:** 5.00 *5* **Cust Item ID:**

Required Date: 9/26/2012 **Req'd Qty:** 5.00 *5* **Customer:**

Reference: USED/REINSPECT/CERTIFY

Approvals: **Process Plan:** MF **Date:** 12-09-26 **Tooling:** **Date:** **Run Start** *NR1*

QC: **Date:** **SPC (Y/N):** **Date:** **Stop** *NR2*

Sequence ID/ Work Center ID	Operation Description	Set Up/ Run Hours	Tool ID	Tool #	Plan Code	Accept Qty	Reject Qty	Reject Number	Insp. Stamp
Draw Nbr	**Revision Nbr**								
D4387	B U/R								
170	MP OK TO SHIP REV B.	0.00							
170									
QC	**Memo**	0.00							
Quality Control	PULL FROM QUARANTINE D4387-041 X 5 B 72273								
	RE-INSPECT AND RE-CERTIFY (SEE PAT SMITH)		AS 16 9-28						
	RESTOCK UNDER NEW BATCH NUMBER		RL 9/27						
	SHOULDER HARNESSES ARE TO BE PULLED ON W/O D412-702-023 X 1 B90801								
180		0.00	263			SD		12/9/27 SD	
180									
Packaging	**Memo**	0.00							
Packaging									

DQA: _____ Date: _____

NCR: Yes / No

WORK ORDER NON-CONFORMANCE / UPDATE

QA Closed: Date:

Work Order: _____

Part No. _____

NCR No. _____

DISPOSITION

- Rework ☐
- Scrap ☐
- Use-as-is ☐
- Work Order Update ☐

AGAINST DEPARTMENT/PROCESS

Skid-tube ☐	Crosstube ☐	Water Jet ☐	Engineering ☐
Machining ☐	Small Fab ☐	Prod. Eng. Coor. ☐	Quality ☐
Thermoforming ☐	Finishing ☐	Rec/Store/Packaging ☐	Other ☐
Large Fab ☐	Composite ☐	Supplier ☐	☐

Root Cause		Date	Step	Qty	Description of work order update or Non-conformance	Initial Chief Eng	Action Description	Sign & Date	Verification	QC Inspector
Doc/Data	☐									
Equip/Tooling	☐									
Operator	☐									
Material	☐									
Setup	☐									
Other	☐									
Process	☐									
Supplier	☐									
Training	☐									
Unapproved	☐									

FAULT CATEGORY

Landing Gear

- ☐ Bending
- ☐ Centre Not Concentric to O/S
- ☐ Cracks
- ☐ Crushed/Crimped
- ☐ Cuffs
- ☐ Heat Treat
- ☐ Inspection Strip in Tube
- ☐ Ripples in Bend
- ☐ Torque Waves in Extrusion
- ☐ Turning Sequence
- ☐ Wave/Twist in Tube

General

- ☐ Bend
- ☐ BOM/Route
- ☐ Broken/Damaged
- ☐ Burrs
- ☐ Contamination
- ☐ Countersink
- ☐ Cut Too Short
- ☐ Drill Holes
- ☐ Drawing
- ☐ Finish
- ☐ Folio
- ☐ Grain
- ☐ Hardware
- ☐ Inspection Incomplete
- ☐ Instructions Incomplete/Unclear
- ☐ Maintenance
- ☐ Mislabeled
- ☐ Misread
- ☐ Offset
- ☐ Out of Calibration
- ☐ Out of Sequence
- ☐ Outside Dimensions
- ☐ Ovalized
- ☐ Over/Under tolerance
- ☐ Part Incorrect
- ☐ Part Lost/Missing
- ☐ Part Moved
- ☐ Positioned Wrong
- ☐ Power Loss/Surge
- ☐ Pressure/Forced
- ☐ Temperature/Cure
- ☐ Weld
- ☐ Wrong Stock Pulled
- ☐ Other _____

Work Order ID 90802

Wednesday, September 26, 2012 1:26:02 PM

90802

Item ID: D4387-041

Revision ID:

Item Name: Harness Assembly

Start Date: 9/26/2012 **Start Qty:** 5.00 *5*

Required Date: 9/26/2012 **Req'd Qty:** 5.00 *5*

Reference: USED/REINSPECT/CERTIFY

Accept *N900040100*

Setup Start *NS1*

Stop *NS2*

Cust Item ID:

Customer:

Run Start *NR1*

Stop *NR2*

Approvals: **Process Plan:** _____ **Date:** _____ **Tooling:** _____ **Date:** _____

QC: _____ **Date:** _____ **SPC (Y/N):** _____ **Date:** _____

Sequence ID/ Work Center ID	Operation Description	Set Up/ Run Hours	Tool ID	Tool #	Plan Code	Accept Qty	Reject Qty	Reject Number	Insp. Stamp
190	QC21- Final Inspection - Work Order Release	0.00							
190									
QC	Memo	0.00							
Quality Control									

MLS 12-09-27

MP 12-09-29

DQA: _____ Date: _____

NCR: Yes / No

WORK ORDER NON-CONFORMANCE / UPDATE

QA Closed: Date:

Work Order: _____

Part No. _____

NCR No. _____

DISPOSITION

- Rework ☐
- Scrap ☐
- Use-as-is ☐
- Work Order Update ☐

AGAINST DEPARTMENT/PROCESS

Skid-tube ☐	Crosstube ☐	Water Jet ☐	Engineering ☐
Machining ☐	Small Fab ☐	Prod. Eng. Coor. ☐	Quality ☐
Thermoforming ☐	Finishing ☐	Rec/Store/Packaging ☐	Other ☐
Large Fab ☐	Composite ☐	Supplier ☐	☐

Root Cause		Date	Step	Qty	Description of work order update or Non-conformance	Initial Chief Eng	Action Description	Sign & Date	Verification	QC Inspector
Doc/Data	☐									
Equip/Tooling	☐									
Operator	☐									
Material	☐									
Setup	☐									
Other	☐									
Process	☐									
Supplier	☐									
Training	☐									
Unapproved	☐									

FAULT CATEGORY

Landing Gear

- ☐ Bending
- ☐ Centre Not Concentric to O/S
- ☐ Cracks
- ☐ Crushed/Crimped
- ☐ Cuffs
- ☐ Heat Treat
- ☐ Inspection Strip in Tube
- ☐ Ripples in Bend
- ☐ Torque Waves in Extrusion
- ☐ Turning Sequence
- ☐ Wave/Twist in Tube

General

- ☐ Bend
- ☐ BOM/Route
- ☐ Broken/Damaged
- ☐ Burrs
- ☐ Contamination
- ☐ Countersink
- ☐ Cut Too Short
- ☐ Drill Holes
- ☐ Drawing
- ☐ Finish
- ☐ Folio
- ☐ Grain
- ☐ Hardware
- ☐ Inspection Incomplete
- ☐ Instructions Incomplete/Unclear
- ☐ Maintenance
- ☐ Mislabeled
- ☐ Misread
- ☐ Offset
- ☐ Out of Calibration
- ☐ Out of Sequence
- ☐ Outside Dimensions
- ☐ Ovalized
- ☐ Over/Under tolerance
- ☐ Part Incorrect
- ☐ Part Lost/Missing
- ☐ Part Moved
- ☐ Positioned Wrong
- ☐ Power Loss/Surge
- ☐ Pressure/Forced
- ☐ Temperature/Cure
- ☐ Weld
- ☐ Wrong Stock Pulled
- ☐ Other

_____

_____

_____

Picklist Print

Wednesday, September 26, 2012 1:26:01 P

Work Order ID: 90802

Parent Item: D4387-041

Parent Item Name: Harness Assembly

Start Date: 9/26/2012 **Required Date:** 9/26/2012

Start Qty: 5.00 **Required Qty:** 5.00

Comments: IPP rev A 11.05.25 new issue EC verified by: DD

Component Item ID/ Item Name	Replacement Item ID	Mfg/ Purch	Bin Item	Primary Location	Last Location	Route Seq ID	Unit of Measure	Qty on Hand	Qty per Kit	Total Qty	Qty Issued	Date Issued	Status
D4387-041 Harness Assembly		Manufactured	No				Each	8.0000		5			

Location	Loc Qty	Loc Code
ST263	8	
85229	2	
88176	6	

B72273

MF 12-09-2

DQA: _____ Date: _____

NCR: Yes / No

WORK ORDER NON-CONFORMANCE / UPDATE

QA Closed: Date:

Work Order: _____

Part No. _____

NCR No. _____

DISPOSITION

- Rework ☐
- Scrap ☐
- Use-as-is ☐
- Work Order Update ☐

AGAINST DEPARTMENT/PROCESS

Skid-tube ☐	Crosstube ☐	Water Jet ☐	Engineering ☐
Machining ☐	Small Fab ☐	Prod. Eng. Coor. ☐	Quality ☐
Thermoforming ☐	Finishing ☐	Rec/Store/Packaging ☐	Other ☐
Large Fab ☐	Composite ☐	Supplier ☐	☐

Root Cause		Date	Step	Qty	Description of work order update or Non-conformance	Initial Chief Eng	Action Description	Sign & Date	Verification	QC Inspector
Doc/Data	☐									
Equip/Tooling	☐									
Operator	☐									
Material	☐									
Setup	☐									
Other	☐									
Process	☐									
Supplier	☐									
Training	☐									
Unapproved	☐									

FAULT CATEGORY

Landing Gear

- ☐ Bending
- ☐ Centre Not Concentric to O/S
- ☐ Cracks
- ☐ Crushed/Crimped
- ☐ Cuffs
- ☐ Heat Treat
- ☐ Inspection Strip in Tube
- ☐ Ripples in Bend
- ☐ Torque Waves in Extrusion
- ☐ Turning Sequence
- ☐ Wave/Twist in Tube

General

- ☐ Bend
- ☐ BOM/Route
- ☐ Broken/Damaged
- ☐ Burrs
- ☐ Contamination
- ☐ Countersink
- ☐ Cut Too Short
- ☐ Drill Holes
- ☐ Drawing
- ☐ Finish
- ☐ Folio
- ☐ Grain
- ☐ Hardware
- ☐ Inspection Incomplete
- ☐ Instructions Incomplete/Unclear
- ☐ Maintenance
- ☐ Mislabeled
- ☐ Misread
- ☐ Offset
- ☐ Out of Calibration
- ☐ Out of Sequence
- ☐ Outside Dimensions
- ☐ Ovalized
- ☐ Over/Under tolerance
- ☐ Part Incorrect
- ☐ Part Lost/Missing
- ☐ Part Moved
- ☐ Positioned Wrong
- ☐ Power Loss/Surge
- ☐ Pressure/Forced
- ☐ Temperature/Cure
- ☐ Weld
- ☐ Wrong Stock Pulled
- ☐ Other _____

Eagle Copters Maintenance Ltd

823 McTavish Rd, NE
Calgary, Alberta T2E 7G9
Canada

Telephone: (403) 250-7370 Fax: (403) 250-7110

PURCHASE ORDER

May 01, 2012

PO-12-001947

Issued: **5/1/2012**

Vendor

Code: VU-DAR004
Name: Dart Aerospce (USD)
Address: 1270 Aberdeen Street
Hawkesbury, Ontario K6A 1K7

Phone: 613-632-5200
Fax: 613-632-5246

Customer

Code: CC-ECML
Name: Eagle Copters Maintenance Ltd
Address: 823 McTavish Rd, NE
Calgary, Alberta T2E 7G9
Canada

Ship to

Name: Eagle Copters Maintenance Ltd
Address: 823 McTavish Rd, NE
Calgary, Alberta T2E 7G9
Canada
Phone: (403) 250-7370

Repair: NO

To Support Eagle Copters' controlled Shelf life program, any material ordered that is subject to a shelf life requirement must be identified on this PO accompanied by supporting documents showing the expiry dates. Material that is not properly identified will be returned to the Vendor or placed in quarantine until the documents are provided.

Item	Qty	Part number/Fuel type	Part/Item Description	Condition	Unit Price	Base Price	UOM	Exch Rate	Extended Amount	Base Extended Amount	Rqr'd Dt	Prms'd Dt
1	1	D412-702-023	Shoulder Harness Kit 4 Point Attachment 5 Man Fwd	Rework	1,700.00	1,734.00	Each	0.980392	1,700.00 USD	1,734.00 CAD	05/01/2012	05/08/2012

Work Order Number: 45864.22.19 #1

Carrier: FED EX

Shipping Instructions: Please ship Fedex P1 acct# 1092 2342 5

Buyer: **Mark Miele**

Approved By: **Mark Miele**

P.O. Total: **1,734.00 CAD** **1,700.00 USD**

* End of Purchase Order *

1. Approving National Aviation Authority/Country:	2.	3. Form Tracking Number:
FAA/United States	**AUTHORIZED RELEASE CERTIFICATE** **FAA Form 8130-3, AIRWORTHINESS APPROVAL TAG**	43662-1NA

4. Organization Name and Address: Amsafe Aviation
1043 NORTH 47TH AVE
PHOENIX, AZ. 85043

Cert. No. I6AR839J

5. Work Order/Contract/Invoice Number: 43662-1

_0_PAGES ATTACHED

6. Item:	7. Description:	8. Part Number:	9. Eligibility: *	10. Quantity:	11. Serial/Batch Number:	12. Status/Work:
1	REST SYS ASSY	4192-1-011-2396	N/A	5	RA1111	OVERHAULED

13. Remarks: DRAWGING: 4192 REPLACED : web-thread-20 labels-5 caps-5 covers-10 springs-5 covers
REV: D
TSO:C114
Overhauled in accordance with process specification number 33169.Rev.04/26/10
"I6AR839J certifies that the work specified in Blocks 12/13 was performed in accordance with EASA Implementation rule part 145,and with respect to that work, the aircraft component is considered Ready for release to service under EASA part 145 approval number EASA.145.4145".

INSPECTED BY: REPAIRMAN 2697495 OVERHAULED BY: Guadalupe Almodovar –Martha Lujan- DATE: 11/10/11

14. Certifies the items identified above were manufactured in conformity to:

- ☐ Approved design data and are in a condition for safe operation.
- ☐ Non-approved design data specified in Block 13.

19. ☒ **14 CFR 43.9 Return to Service** ☒ **Other regulation specified in Block 13**

Certifies that unless otherwise specified in Block 13, the work identified in Block 12 and described in Block 13 was accomplished in accordance with Title 14, Code of Federal Regulations, part 43 and in respect to that work, the items are approved for return to service.

15. Authorized Signature:	16. Approval/Authorization No.:	20. Authorized Signature:	21. Approval/Certificate No.:
			I6AR839J
17. Name (Typed or Printed):	18. Date (m/d/y):	22. Name (Typed or Printed): NELLIE ALVARADO	23. Date (m/d/y): NOV/14/2011

User/Installer Responsibilities

It is important to understand that the existence of this document alone does not automatically constitute authority to install the part/component/assembly.

Where the user/installer performs work in accordance with the national regulations of an airworthiness authority different than the airworthiness authority of the country specified in Block 1, it is essential that the user/installer ensures that his/her airworthiness authority accepts parts/components/assemblies from the airworthiness authority of the country specified in Block 1.

Statements in Blocks 14 and 19 do not constitute installation certification. In all cases, aircraft maintenance records must contain an installation certification issued in accordance with the national regulations by the user/installer before the aircraft may be flown.

FAA Form 8130-3 (6-01) *Installer must cross-check eligibility with applicable technical data. NSN: 0052-00-012-90

HELICOPTER TRANSPORT SERVICES (CANADA) INC.
Carp, Ontario K0A 1L0

Nomenclature: SMAN SEAT BELT Harness
Part No.: 6470-702-1/8 Serial No.: 15 702/5
Removed from A/C: C-GILK Date: 5 JUL 28 2011
Total A/C Hours: 10869.0 Total A/C Cycles: —
Item TSN/TSO: — Item CSN/CSO: —

☐ REPAIRABLE ☒ SCRAP

Removed by: Kyle Sutton

STATE REASON FOR REMOVAL ON OTHER SIDE

UNSERVICEABLE

DCS D4387

WORK ORDER (TOP ASSY)
D412-702-023
WORK ORDER (SUB ASSY)
QTY 5 D4387-041

SPECIFICATION CONTROL DRAWING

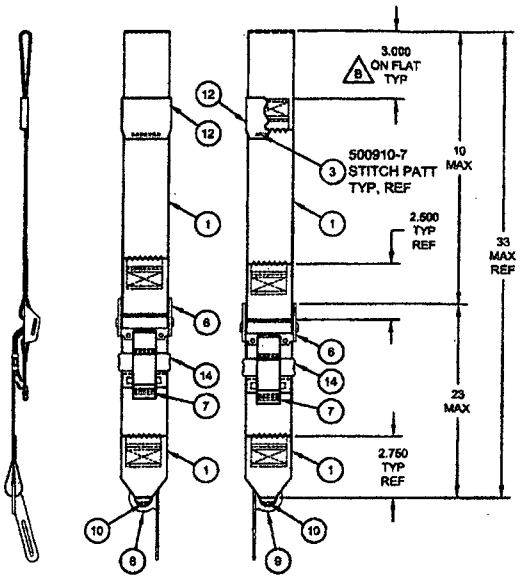

D4387-7 D4387-5

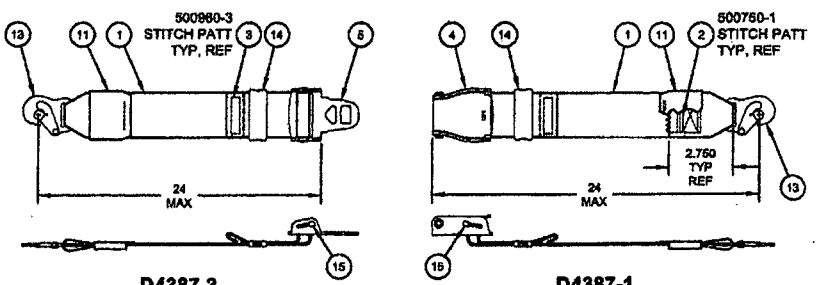

D4387-3 D4387-1

D4387-041 HARNESS ASSEMBLY

ITEM	QTY -041	QTY -1	QTY -3	QTY -5	QTY -7	DART P/N	DESCRIPTION	AMSAFE P/N OR MATERIAL P/N
	X					D4387-041	HARNESS ASSEMBLY	4192-1-011-2396
	1	X				D4387-1	BUCKLE HALF	4192-2010112396
	1		X			D4387-3	CONNECTOR HALF	4192-2030112396
	1			X		D4387-5	SHOULDER STRAP	4192-2050112396
	1				X	D4387-7	SHOULDER STRAP	4192-2050112396
1		A/R	A/R	A/R	A/R		WEBBING, POLYESTER	T1200-5
2		A/R	A/R	A/R	A/R		THREAD	207
3		A/R	A/R	A/R	A/R		THREAD	69
4		1					BUCKLE ASSY	502750-401
5			1				CONNECTOR ASSY	504459-417-72
6				1	1		ADJUSTER ASSY	503050-409
7				1	1		PULL TAB	500978-425
8					1		ADAPTER, HARNESS	505122-2-72
9				1			ADAPTER, HARNESS	505122-1-72
10				1	1		INSERT	AFG0566293
11		1	1				LABEL	447664
12				1	1		LABEL	447664
13		1	1				HOOK ASSY	502737-441-72
14		1	1	1	1		WEB SLIDE	503964-1
15		2	2				PLUG	502813

NOTES:
1) PURCHASE: D4387-041/-1/-3/-5/-7 FROM AMSAFE INC., Phoenix, AZ.
2) FINISH: N/A
3) TOLERANCES: .XXX ±0.250
4) UNITS: INCHES UNLESS OTHERWISE NOTED
5) BREAK SHARP EDGES: N/A
6) IDENTIFICATION: USE PLASTIC ENGRAVED TAGS AND LABEL PER FAR 21.607 TO CONTAIN THE FOLLOWING AT MINIMUM:
   MANUFACTURER P/N: 4192-1-011-2396
   CUSTOMER P/N: D4387-041
   DATE OF MFG
   CONFORMS TO FAA TSO-C114
7) WEIGHT: 1.75 lb
8) INDICATED DIMS ARE FULLY EXTENDED LENGTHS

UNDER REVIEW
12/06/10
FOR REV. C

RELEASED
2011-06-16

REV.	DESCRIPTION	BY	DATE
B	3.000 TYP WAS 2.000 TYP (ZN D6-1) (REF. NCR11-644)	MB	11.06.07
A	NEW ISSUE (REF. CAR10-011)	MB	11.06.02

DESIGN		DART AEROSPACE LTD HAWKESBURY, ONTARIO, CANADA	
DRAWN		DRAWING NO.	REV. B
CHECKED		D4387	SHEET 1 OF 2
MFG. APPR.		TITLE	SCALE
APPROVED		HARNESS ASSEMBLY	NTS
DE APPR.			
DATE	11.06.07		

COPYRIGHT © 2011 BY DART AEROSPACE LTD
THIS DOCUMENT IS PRIVATE AND CONFIDENTIAL AND IS SUPPLIED ON THE EXPRESS CONDITION THAT IT IS NOT TO BE USED FOR ANY PURPOSE OR COPIED OR COMMUNICATED TO ANY OTHER PERSON WITHOUT WRITTEN PERMISSION FROM DART AEROSPACE LTD.

SPECIFICATION CONTROL DRAWING

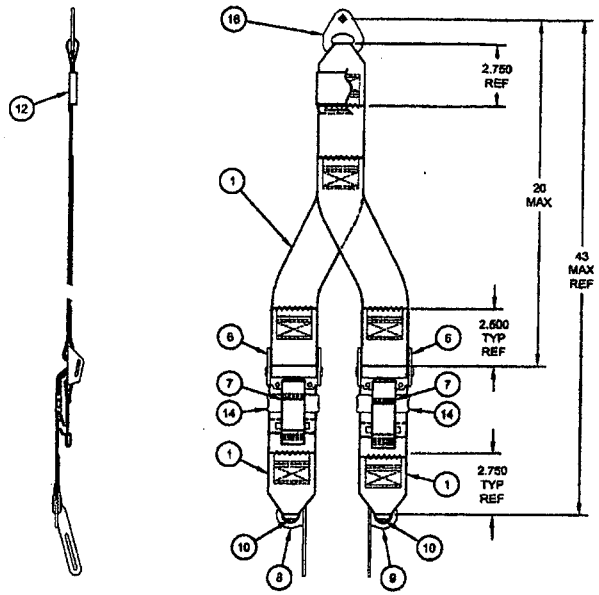

D4387-9

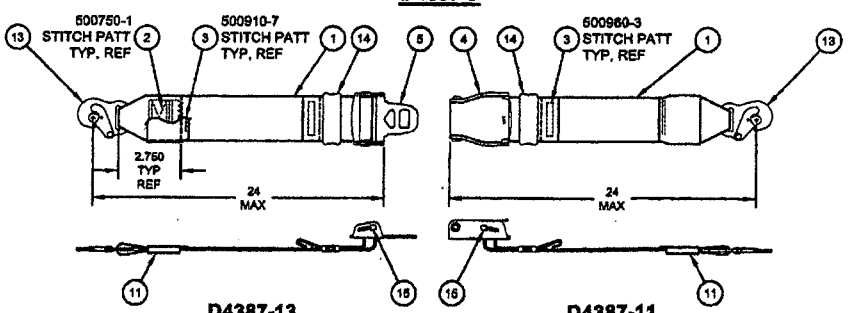

D4387-13 D4387-11

D4387-043 HARNESS ASSEMBLY

ITEM	QTY -043	QTY -9	QTY -11	QTY -13	DART P/N	DESCRIPTION	AMSAFE P/N OR MATERIAL P/N
	X				D4387-043	HARNESS ASSEMBLY	4173-2-021-2396
	1	X			D4387-9	SHOULDER STRAP	4173-2110212396
	1		X		D4387-11	BUCKLE HALF	4173-2070212396
	1			X	D4387-13	CONNECTOR HALF	4173-2090212396
1		A/R	A/R	A/R		WEBBING, POLYESTER	T1200-5
2		A/R	A/R	A/R		THREAD	207
3		A/R	A/R	A/R		THREAD	69
4			1			BUCKLE ASSY	502750-401
5				1		CONNECTOR ASSY	504459-417-72
6		2				ADJUSTER ASSY	503050-409
7		2				PULL TAB	500976-425
8		1				ADAPTER, HARNESS	505122-2-72
9		1				ADAPTER, HARNESS	505122-1-72
10		2				INSERT	AFG0568293
11			1	1		LABEL	447664
12		1				LABEL	447664
13		2	1	1		HOOK ASSY	502737-441-72
14			1	1		WEB SLIDE	503964-1
15			2	2		PLUG	502913
16		1				END FITTING	501743-21-72

NOTES:
1) PURCHASE: D4387-043/-9/-11/-13 FROM AMSAFE INC., Phoenix, AZ.
2) FINISH: N/A
3) TOLERANCES: .XXX ±0.250
4) UNITS: INCHES UNLESS OTHERWISE NOTED
5) BREAK SHARP EDGES: N/A
6) IDENTIFICATION: USE PLATIC ENGRAVED TAGS AND LABEL PER FAR 21.607 TO CONTAIN THE FOLLOWING AT MINIMUM:
   MANUFACTURER P/N: 4173-2-021-2396
   CUSTOMER P/N: D4387-043
   DATE OF MFG
   CONFORMS TO FAA TSO-C114
7) WEIGHT: 1.85 lb
8) INDICATED DIMS ARE FULLY EXTENDED LENGTHS

UNDER REVIEW
12/06/18 [illegible]

RELEASED
2011-06-16

DESIGN		DART AEROSPACE LTD HAWKESBURY, ONTARIO, CANADA
DRAWN		
CHECKED		DRAWING NO. D4387 — REV. B — SHEET 2 OF 2
MFG. APPR.		
APPROVED		TITLE: HARNESS ASSEMBLY — SCALE: NTS
DE APPR.		
DATE	11.06.07	

COPYRIGHT © 2011 BY DART AEROSPACE LTD
THIS DOCUMENT IS PRIVATE AND CONFIDENTIAL AND IS SUPPLIED ON THE EXPRESS CONDITION THAT IT IS NOT TO BE USED FOR ANY PURPOSE OR COPIED OR DISMISSED TO ANY OTHER PERSON WITHOUT WRITTEN PERMISSION FROM DART AEROSPACE LTD.

QTY -021	QTY -023	QTY -025	QTY -027	QTY -029	QTY -035	Part Number	Description
X						**D412-702-021**	**Dart 13-Man Shoulder Harness Kit, 4-point**
	X					**D412-702-023**	**Dart 5-Man Forward Facing Shoulder Harness Kit, 4-point**
		X				**D412-702-025**	**Dart 4-Man Aft Facing Shoulder Harness Kit, 4-point**
			X			**D412-702-027**	**Dart 4-Man Side Facing Shoulder Harness Kit, 4-point**
				X		**D412-702-029**	**Dart 1-Man Forward Facing Shoulder Harness Kit, 4-point**
					X	**D214-702-035**	**Dart 5-Man Aft Facing Shoulder Harness Kit, 4-point, for Bell 214B/B-1**
1	1		1	1		D412-702-069	GROMMET KIT
2	2					D3195-041	BRACKET
2	2					D3195-043	BRACKET
1	1			1		D3196-1	BAR
1			1			D3196-3	BAR
1			1			D3196-4	BAR
2	2					D3197-041	BAR
4		4				D3198-1	FITTING
2	2					D3268-1	PLACARD
9	5		4	1		D3446-041	HARNESS ASSEMBLY, 4 POINT
4		4				D3446-043	HARNESS ASSEMBLY, 4 POINT
					5	D3446-045	HARNESS ASSEMBLY, 4 POINT
13	5	4	4	1	5	D3551-11	HOOK AND LOOP TIE
2	2					D3546-1	CLIP
4		4				AN4-5A	BOLT
4	4					AN4-13A	BOLT
8		8				AN4-20A	BOLT
20		20				AN960JD416	WASHER (OR NAS1149D0463J)
12		12				MS21042L4	NUT (OR MS21042-4)
8	2		6	2		MS24694-S152	SCREW
8	2		6	2		MS24694-S154	SCREW

QTY -069	Part Number	Description
X	**D412-702-069**	**GROMMET KIT**
24	D3619-2	GROMMET
1	D3619-2T1	HOLE PUNCH
1	D3619-2T2	STRIKER BLOCK
1	D3619-2T3	PUNCH
1	D3619-2T4	DIE

• COPYRIGHT © 2010 BY DART AEROSPACE LTD •
THIS DOCUMENT IS PRIVATE AND CONFIDENTIAL AND IS SUPPLIED ON THE EXPRESS CONDITION THAT IT IS NOT TO BE USED FOR ANY PURPOSE OR COPIED OR COMMUNICATED TO ANY OTHER PERSON WITHOUT WRITTEN PERMISSION FROM DART AEROSPACE LTD.

1.0 INTRODUCTION

1.1 4 Point Shoulder Harness Kits for Passenger Seats

The Dart **D412-702-011** 13-Man Shoulder Harness Kit provides 4-point shoulder harnesses for all 13 passenger seating positions in the aircraft. The kit contains shoulder belts that loop over the existing lap belts, as well as hardpoints for securing the belts.

The Dart **D412-702-013** 5-Man Forward Facing Shoulder Harness Kit provides 4-point shoulder harnesses for the 5 forward facing seating positions in the aircraft cabin. The kit contains shoulder belts that loop over the existing lap belts, as well as hardpoints for securing the belts.

The Dart **D412-702-015** 4-Man Aft Facing Shoulder Harness Kit provides 4-point shoulder harnesses for the 4 aft facing seating positions in the aircraft cabin. The kit contains shoulder belts that loop over the existing lap belts, as well as hardpoints for securing the belts.

The Dart **D412-702-017** 4-Man Side Facing Shoulder Harness Kit provides 4-point shoulder harnesses for the 4 side facing seating positions in the aircraft cabin. The kit contains shoulder belts that loop over the existing lap belts, as well as hardpoints for securing the belts.

The Dart **D412-702-019** 1-Man Forward Facing Shoulder Harness Kit provides a 4-point shoulder harness for the center forward facing seating position in the aircraft cabin. The kit contains shoulder belts that loop over the existing lap belts, as well as hardpoints for securing the belts.

The Dart **D412-702-021** 13-Man Shoulder Harness Kit provides 4-point harnesses for all 13 passenger seating positions in the aircraft. The kit also contains hardpoints for securing the harnesses. The harnesses for this kit meet the requirements of TSO-C114 and replace the existing lap belts.

The Dart **D412-702-023** 5-Man Forward Facing Shoulder Harness Kit provides 4-point harnesses for the 5 forward facing seating positions in the aircraft cabin. The kit also contains hardpoints for securing the harnesses. The harnesses for this kit meet the requirements of TSO-C114 and replace the existing lap belts.

The Dart **D412-702-025** 4-Man Aft Facing Shoulder Harness Kit provides 4-point harnesses for the 4 aft facing seating positions in the aircraft cabin. The kit also contains hardpoints for securing the harnesses. The harnesses for this kit meet the requirements of TSO-C114 and replace the existing lap belts.

The Dart **D412-702-027** 4-Man Side Facing Shoulder Harness Kit provides 4-point harnesses for the 4 side facing seating positions in the aircraft cabin. The kit also contains hardpoints for securing the harnesses. The harnesses for this kit meet the requirements of TSO-C114 and replace the existing lap belts.

The Dart **D412-702-029** 1-Man Forward Facing Shoulder Harness Kit provides a 4-point shoulder harness for the center forward facing seating position in the aircraft cabin. The kit contains hardpoints for securing the harness. The harness for this kit meets the requirements of TSO-C114 and replaces the existing lap belts.

The Dart **D214-702-035** 5-Man Aft Facing Shoulder Harness Kit provides 4-point harnesses for the 5 aft facing seating positions of Bell Helicopter's 214-070-700-009 Passenger Seat Kit for the Bell 214B/214B-1 aircraft. The harnesses for this kit meet the requirements of TSO-C114 and replace the existing lap belts.

The Dart **D412-702-069** Grommet Kit provides grommets and grommet installation tools for use on the OEM thermal blankets when installing the 4-point shoulder harness kits.

• COPYRIGHT © 2003 BY DART AEROSPACE LTD •
THIS DOCUMENT IS PRIVATE AND CONFIDENTIAL AND IS SUPPLIED ON THE EXPRESS CONDITION THAT IT IS NOT TO BE USED FOR ANY PURPOSE OR COPIED OR COMMUNICATED TO ANY OTHER PERSON WITHOUT WRITTEN PERMISSION FROM DART AEROSPACE LTD.

BATCH # B70053.

HELICOPTER TRANSPORT SERVICES (CANADA) INC.
Carp, Ontario K0A 1L0 D.O.T. APPROVAL NO: 28-89

Nomenclature: BELT ASSY
Manufacturer: DART Type/Model: 212.
Part No: D4387-041 Serial No: N/A
Total Time: 0.0 Work Order: C-GHTK
T.S.O. N/A C.S.N. N/A C.S.O. N/A.
Overhaul ☐ Repair ☐ Modification ☐ Removal ☑
Previous Certification: C-GHTK.
The maintenance described has been performed in accordance with the applicable standards of airworthiness.
New ☐ Incoming inspection carried out
JULY 22/2011 [signature] A24 # 666.
DATE NAME OF AUTHORIZED INSPECTOR LIC. No./STAMP

Details of outstanding work and other information on reverse

MAINTENANCE RELEASE

BATCH # B70053.

HELICOPTER TRANSPORT SERVICES (CANADA) INC.
Carp, Ontario K0A 1L0 D.O.T. APPROVAL NO: 28-89

Nomenclature: BELT ASSY
Manufacturer: DART Type/Model: 212.
Part No: D4387-041 Serial No: N/A
Total Time: 0.0 Work Order: C-GHTK.
T.S.O. N/A C.S.N. N/A C.S.O. N/A.
Overhaul ☐ Repair ☐ Modification ☐ Removal ☑
Previous Certification: C-GHTK.
The maintenance described has been performed in accordance with the applicable standards of airworthiness.
New ☐ Incoming inspection carried out
JULY 22/2011 [signature] A24 # 666
DATE NAME OF AUTHORIZED INSPECTOR LIC. No./STAMP

Details of outstanding work and other information on reverse

MAINTENANCE RELEASE

BATCH # B70053

HELICOPTER TRANSPORT SERVICES (CANADA) INC.
Carp, Ontario K0A 1L0 D.O.T. APPROVAL NO: 28-89

Nomenclature: BELT ASSY
Manufacturer: DART Type/Model: 212.
Part No: D4387-041 Serial No: N/A
Total Time: 0.0 Work Order: C-GHTK.
T.S.O. N/A C.S.N. N/A C.S.O. N/A.
Overhaul ☐ Repair ☐ Modification ☐ Removal ☑
Previous Certification: C-GHTK.
The maintenance described has been performed in accordance with the applicable standards of airworthiness.
New ☐ Incoming inspection carried out
JULY 22 2011 [signature] A24 # 666
DATE NAME OF AUTHORIZED INSPECTOR LIC. No./STAMP

Details of outstanding work and other information on reverse

MAINTENANCE RELEASE

The D412-702-011/-013/-015/-017/-019 kits can be converted to D412-702-021/-023/-025/-027/-029 kits (respectively) by replacing the D3215-041/-043 Harness Assemblies with D3446-041/-043 Harness Assemblies (respectively) per the appropriate installation procedure of these instructions. Note that 1x D3446-041 will replace 2x D3215-041 and 1x D3446-043 will replace 1x D3215-043.

Figure 1.1 shows the D412-702-011/-021 13-man shoulder harness kits and ***Figure 1.2*** shows the D412-702-019/-029 1-man shoulder harness kit.

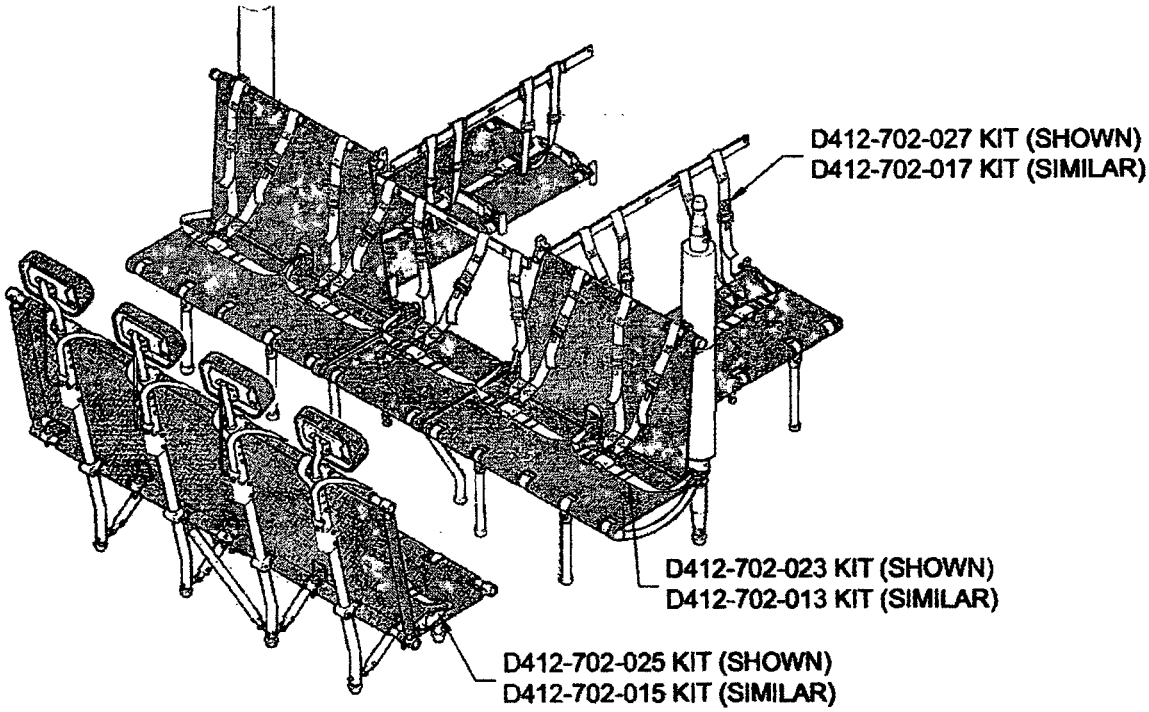

FIGURE 1.1. *DART D412-702-011/-021 13-MAN 4-POINT SHOULDER HARNESS KITS*
(D412-702-021 KIT SHOWN, D412-702-011 KIT SIMILAR)

• COPYRIGHT © 2003 BY DART AEROSPACE LTD •
THIS DOCUMENT IS PRIVATE AND CONFIDENTIAL AND IS SUPPLIED ON THE EXPRESS CONDITION THAT IT IS NOT TO BE USED FOR ANY PURPOSE OR COPIED OR COMMUNICATED TO ANY OTHER PERSON WITHOUT WRITTEN PERMISSION FROM DART AEROSPACE LTD.

BATCH # B70053.

HELICOPTER TRANSPORT SERVICES (CANADA) INC.

Carp, Ontario K0A 1L0 D.O.T. APPROVAL NO: 28-89

Nomenclature: BELT ASSY

Manufacturer: DART Type/Model: 212.

Part No: D4387-041 Serial No: N/A

Total Time: 0.0 Work Order: C-GHTK

T.S.O. N/A C.S.N. N/A C.S.O. N/A

Overhaul ☐ Repair ☐ Modification ☐ Removal ☑

Previous Certification: C-GHTK.

The maintenance described has been performed in accordance with the applicable standards of airworthiness.

New ☐ Incoming inspection carried out

July 22/2011 [signature] AC# dd6

DATE NAME OF AUTHORIZED INSPECTOR LIC. No./STAMP

Details of outstanding work and other information on reverse

MAINTENANCE RELEASE

BATCH # B70053.

HELICOPTER TRANSPORT SERVICES (CANADA) INC.

Carp, Ontario K0A 1L0 D.O.T. APPROVAL NO: 28-89

Nomenclature: BELT ASSY

Manufacturer: DART Type/Model: 212.

Part No: D4387-041 Serial No: N/A

Total Time: 0.0 Work Order: C-GHTK.

T.S.O. N/A C.S.N. N/A C.S.O. N/A

Overhaul ☐ Repair ☐ Modification ☐ Removal ☑

Previous Certification: C-GHTK

The maintenance described has been performed in accordance with the applicable standards of airworthiness.

New ☐ Incoming inspection carried out

July 22/2011 [signature] AC# dd6

DATE NAME OF AUTHORIZED INSPECTOR LIC. No./STAMP

Details of outstanding work and other information on reverse

MAINTENANCE RELEASE

BATCH# B70053.

HELICOPTER TRANSPORT SERVICES (CANADA) INC.
Carp, Ontario K0A 1L0 D.O.T. APPROVAL NO: 28-89

Nomenclature: BELT ASSY
Manufacturer: DART Type/Model: 212.
Part No: D4387-041 Serial No: N/A
Total Time: 0.0 Work Order: C-GHTK
T.S.O. N/A C.S.N. N/A C.S.O. N/A.
Overhaul ☐ Repair ☐ Modification ☐ Removal ☑
Previous Certification: C-GHTK.
The maintenance described has been performed in accordance with the applicable standards of airworthiness.
New ☐ Incoming inspection carried out
July 22/2011 AGA# 066.
DATE NAME OF AUTHORIZED INSPECTOR LIC. No./STAMP

Details of outstanding work and other information on reverse

MAINTENANCE RELEASE

BATCH# B70053.

HELICOPTER TRANSPORT SERVICES (CANADA) INC.
Carp, Ontario K0A 1L0 D.O.T. APPROVAL NO: 28-89

Nomenclature: BELT ASSY
Manufacturer: DART Type/Model: 212.
Part No: D4387-041 Serial No: N/A
Total Time: 0.0 Work Order: C-GHTK.
T.S.O. N/A C.S.N. N/A C.S.O. N/A.
Overhaul ☐ Repair ☐ Modification ☐ Removal ☑
Previous Certification: C-GHTK.
The maintenance described has been performed in accordance with the applicable standards of airworthiness.
New ☐ Incoming inspection carried out
July 22/2011 AGA# 066
DATE NAME OF AUTHORIZED INSPECTOR LIC. No./STAMP

Details of outstanding work and other information on reverse

MAINTENANCE RELEASE

BATCH# B70053

HELICOPTER TRANSPORT SERVICES (CANADA) INC.
Carp, Ontario K0A 1L0 D.O.T. APPROVAL NO: 28-89

Nomenclature: BELT ASSY
Manufacturer: DART Type/Model: 212.
Part No: D4387-041 Serial No: N/A
Total Time: 0.0 Work Order: C-GHTK.
T.S.O. N/A C.S.N. N/A C.S.O. N/A.
Overhaul ☐ Repair ☐ Modification ☐ Removal ☑
Previous Certification: C-GHTK.
The maintenance described has been performed in accordance with the applicable standards of airworthiness.
New ☐ Incoming inspection carried out
July 22/2011 AGA# 066
DATE NAME OF AUTHORIZED INSPECTOR LIC. No./STAMP

Details of outstanding work and other information on reverse

MAINTENANCE RELEASE

BATCH # B70053.

HELICOPTER TRANSPORT SERVICES (CANADA) INC.
Carp, Ontario K0A 1L0 D.O.T. APPROVAL NO: 28-89

Nomenclature: BELT ASSY
Manufacturer: DART Type/Model: 212.
Part No: D4387-041 Serial No: N/A
Total Time: 0.0 Work Order: C-GHTK
T.S.O. N/A C.S.N. N/A C.S.O. N/A.
Overhaul ☐ Repair ☐ Modification ☐ Removal ☑
Previous Certification: C-GHTK.
The maintenance described has been performed in accordance with the applicable standards of airworthiness.
New ☐ Incoming inspection carried out
July 22/2011 AGA # 666.
DATE NAME OF AUTHORIZED INSPECTOR LIC. No./STAMP

Details of outstanding work and other information on reverse

MAINTENANCE RELEASE

BATCH # B70053.

HELICOPTER TRANSPORT SERVICES (CANADA) INC.
Carp, Ontario K0A 1L0 D.O.T. APPROVAL NO: 28-89

Nomenclature: BELT ASSY
Manufacturer: DART Type/Model: 212.
Part No: D4387-041 Serial No: N/A
Total Time: 0.0 Work Order: C-GHTK.
T.S.O. N/A C.S.N. N/A C.S.O. N/A.
Overhaul ☐ Repair ☐ Modification ☐ Removal ☑
Previous Certification: C-GHTK.
The maintenance described has been performed in accordance with the applicable standards of airworthiness.
New ☐ Incoming inspection carried out
July 22/2011 AGA # 666
DATE NAME OF AUTHORIZED INSPECTOR LIC. No./STAMP

Details of outstanding work and other information on reverse

MAINTENANCE RELEASE

BATCH # B70053

HELICOPTER TRANSPORT SERVICES (CANADA) INC.
Carp, Ontario K0A 1L0 D.O.T. APPROVAL NO: 28-89

Nomenclature: BELT ASSY
Manufacturer: DART Type/Model: 212.
Part No: D4387-041 Serial No: N/A
Total Time: 0.0 Work Order: C-GHTK.
T.S.O. N/A C.S.N. N/A C.S.O. N/A.
Overhaul ☐ Repair ☐ Modification ☐ Removal ☑
Previous Certification: C-GHTK.
The maintenance described has been performed in accordance with the applicable standards of airworthiness.
New ☐ Incoming inspection carried out
July 22 2011 AGA # 666
DATE NAME OF AUTHORIZED INSPECTOR LIC. No./STAMP

Details of outstanding work and other information on reverse

MAINTENANCE RELEASE

AMSAFE

AMSAFE AVIATION
1043 NORTH 47th AVENUE
PHOENIX, AZ 85043
PH (602)850-2850 FAX (602)850-2812

SHIPPER/CERTIFICATION

CUSTOMER NO.	SALES ORDER NO.	BOL NO.	DATE PRINTED	PAGE NO.
10012691	43662	000250169	11/17/11	1

DART AEROSPACE
1270 ABERDEEN STREET
HAWKESBURY, ON K6A 1K7
Canada

DART AEROSPACE LTD.
1270 ABERDEEN ST
HAWKSBURY,, ON K6A 1K7
Canada

Ship to ID: 10006125

CUSTOMER ORDER NO.	TERMS	FREIGHT	SHIP VIA	F.O.B.
PO15387	NET30	COLLECT	FedEx P1 10:30 AM	ORIGIN

Sales Order Remarks: 1517-9324-0
Remarks:
SHIP SOONER IF POSSIBLE

SHIPMENT REFERENCE 000250169

LINE	ITEM NUMBER / DESCRIPTION	DRAWING AND CERTIFICATIONS	DUE DATE	QTY ORDERED	QTY SHIPPED	QTY BACK ORDERED
1	4192-1-011-2396 REST SYS ASSY	DRAWING: 4192 REV: D CERT: TSO-C114 Lot/Serial Numbers Shipped Quantity 43662-1 5.0 CRO # 43662	2011-11-21	5 Expire Ref.	5 5	0

Sulu/21

I certify that the article(s) listed above conform to all applicable design data, and (as applicable):
FAA PMA, FMVSS 209, FMVSS 302, 14 CFR 25.853, DFARS 252-225-7009
FAA TSO C22f, C22g, C114 or TSO Plus

The conditions and tests required for TSO approval of the article(s) are minimum performance standards. It is the responsibility of those installing the article(s) either on or within a specific type or class of aircraft to determine that the aircraft installation conditions are within the standards applicable to the TSO article including (when applicable) the integrated non-TSO function. The non-TSO function is described as the seat belt airbag system including the inflator cable assembly and electrical components that have not been evaluated for functionality or installation requirements. TSO articles including the integrated non-TSO function must have separate approval for installation in an aircraft. The article(s) may be installed only if performed under 14 CFR part 43 or the applicable airworthiness requirements. Product shipped meets all material, processing and test requirements. Certifications/Test reports as applicable are retained on file at AmSafe Aviation.

AmSafe Authorized Signature: X Jesse Ochoa

Printed Name: Jesse Ochoa

Dated: NOV 17 2011 / /

COUNTRY OF ORIGIN USA

DART SERVICE INSTRUCTION

TO AMEND IIN-D412-702-1 REV. A,
AND ICA-D412-702 REV. 4 OR EARLIER APPROVED REVISIONS
REF. TCCA STC: SH04-7
REF. FAA STC: SR01997NY
REF. EASA STC: EASA.IM.R.S.00710

PURPOSE

The purpose of this DSI is to outline the replacement of existing D3446-041/-043 Shoulder Harnesses with the new and improved D4387-041/-043 Shoulder Harnesses.

CHANGE

For the following Kits, the D4387-041 and D4387-043 Shoulder Harnesses respectively replace the D3446-041 and D3446-043 Shoulder Harnesses as follows:

Old Harness P/N	Used On	New Harness P/N	Effectivity
D3446-041	D412-702-021	D4387-041	CHG 003 and subsequent
	D412-702-023		
	D412-702-027		CHG 002 and subsequent
	D412-702-029		
D3446-043	D412-702-021	D4387-043	CHG 003 and subsequent
	D412-702-025		CHG 002 and subsequent

Customers who want to upgrade their shoulder harnesses may replace their existing D3446-041/-043 with D4387-041/-043 per this service instruction.

CANADA
DEPARTMENT OF TRANSPORT
AIRCRAFT CERTIFICATION
BRANCH
DAO # 01-O-01

APPROVED
BY: D. SHEPHERD (DE # 02)

DATE: 11.05.09
CERT. NO.: SH04-7
ISSUE NO.: 3

REV.	DESCRIPTION	BY	DATE
A	NEW ISSUE	MB	11.05.09

DESIGN		DART AEROSPACE LTD HAWKESBURY, ONTARIO, CANADA
DRAWN		
CHECKED		DRAWING NO. DSI 9559 — REV. A — SHEET 1 OF 1
MFG. APPR.	N/A	
APPROVED		TITLE: HARNESS CHANGE — SCALE: NTS
DE APPR.		
DATE	11.05.09	

COPYRIGHT © 2011 BY DART AEROSPACE LTD
THIS DOCUMENT IS PRIVATE AND CONFIDENTIAL AND IS SUPPLIED ON THE EXPRESS CONDITION THAT IT IS NOT TO BE USED FOR ANY PURPOSE OR COPIED OR COMMUNICATED TO ANY OTHER PERSON WITHOUT WRITTEN PERMISSION FROM DART AEROSPACE LTD.

AmSafe
Aviation
Repair Station I6AR839J

CUSTOMER
REWORK ORDER
TEAR DOWN REPORT

CRO No: 43662
Date: 07/26/11

Cust: DART AEROSPACE
Part: 4192-1-011-2396
Quantity: 5.0
Cust Part: D4387-041

Cust PO: PO15387
Pt Name: REST SYS ASSY
Drawing: 4192
Mfg Dt: A0511

SO#: 436602-1

Rev: D

REASON FOR RETURN(Customer's Stmt)

REWEB

INVESTIGATION BY: DELIA
Confirmed: ✓ Other: Dirty update

Date: 07/26/11

Top Assy:

Disposition: REPAIR
Service Bulletins:

Freight: CUST
Responsibility: CUST

WORK INSTRUCTIONS BY: M.

Date: 7/26/11

		FIRST ARTICLE DIMENSION	ACTUAL
M	Process Spec #33196		
LA	Disassemble Hdwr/Non-Serv(red tag) Scrap		
M	Inspect for Serviceability		
M	Record Hardware Lot# of MFG date code		
M	Reweb Required	33.00 Ref.	33.00, 33.00
M	Relabel to include R in date code	24.00 ±.00 X2	24.37, 24.37
LA	Clean Component/Assy. per print	10.00 ±.00 X2	10.37, 10.37
LA	Replace hardware/Record p/n/qty/lot(BOM)	23.00 ±.00 X2	23.25, 23.37
ML	Manufacture First Article per print / S/B	.75 ± 12 X2	.75, .75
N/A	Test Rec'd(A-108 If Req'd) Pass___ Fail___	2.00 ±.25 X2	2.56, 2.62
ML	Rebuild remaining units per print / S/B	2.75 ± .25 X4	3.00, 2.87, 2.87, 2.8
	Final Inspection	3.00 ±.25 X2	3.25 3.25
N/A	FAA Return to Service Tag# 436602-1 N/A		
N/A	Print Statement of Conformance		

Am-Safe Aviation Form No. 101(REV 07/14/10)

MAINTENANCE RELEASE

MAINTENANCE RELEASE

Remarks

(Details of work performed / reason for removal)

TO BE RETURNED TO DART.

(Additional work to be performed upon installation)

Installed on: _____ A/F Time: _____
Eng. Time: _____ Cycles: _____
Sign: _____ Date: _____

MAINTENANCE RELEASE

Remarks

(Details of work performed / reason for removal)

TO BE RETURNED TO DAR

(Additional work to be performed upon installation)

Installed on: _____ A/F Time: _____
Eng. Time: _____ Cycles: _____
Sign: _____ Date: _____

MAINTENANCE RELEASE

Remarks

(Details of work performed / reason for removal)

TO BE RETURNED TO DART

(Additional work to be performed upon installation)

Installed on: _____ A/F Time: _____
Eng. Time: _____ Cycles: _____
Sign: _____ Date: _____

Remarks

(Details of work performed / reason for removal)

TO BE RETURNED TO DART.

(Additional work to be performed upon installation)

Installed on: _____ A/F Time: _____
Eng. Time: _____ Cycles: _____
Sign: _____ Date: _____

Remarks

(Details of work performed / reason for removal)

TO BE RETURNED TO DART.

(Additional work to be performed upon installation)

Installed on: _____ A/F Time: _____
Eng. Time: _____ Cycles: _____
Sign: _____ Date: _____

MAINTENANCE RELEASE